HANBELL

www.hanbell.com.cn

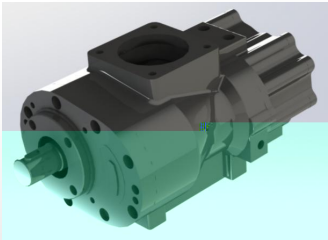

AA ( )

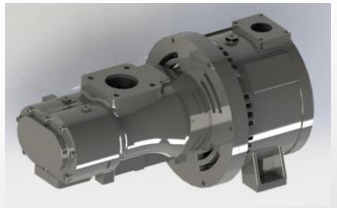

AB ( )

AC ( )

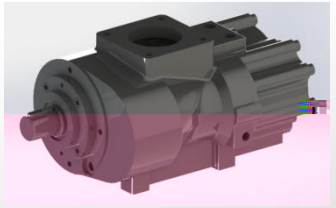

AB+B/F 5.8

AA ( )

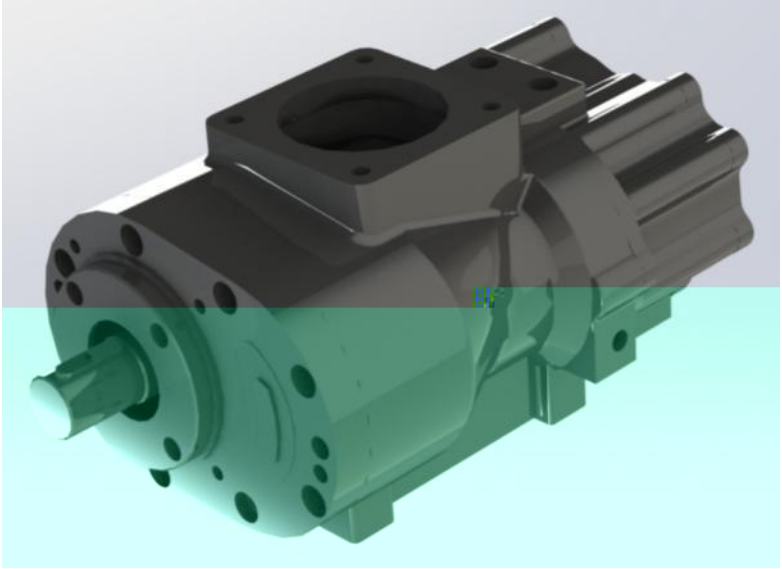

6.0~16.0 bar.g

-
-
- 15

(8 bar.g)

(kW)		(rpm)	(m^3/min)	(kW)	(kW/m^3/min)	S.F.
7.5	AA-077 ( )	3420	1.0	7.3	7.4	0.97
11	AA-077 ( )	5200	1.5	11.0	7.2	1.00
15	AA-130 ( )	3420	2.0	14.6	7.2	0.97
18.5	AA-210	2950	2.9	19.4	6.7	1.05
22	AA-240	2950	3.5	22.7	6.4	1.03
37	AA-420	2950	6.2	38.2	6.1	1.03
45	AA-480R	2950	7.1	47.5	6.7	1.05
55	AA-600R	2950	9.1	57.6	6.3	1.05
75	AA-780R	2950	11.9	73.3	6.1	0.98
90	AA-1030R	2950	15.7	104.5	6.6	1.08
110	AA-1200R	2950	19.4	115.5	5.9	1.05
132	AA-1320	2950	21.4	139.5	6.5	1.06
160	AA-1560	2950	23.9	151.6	6.3	0.95
185	AA-1900R	2950	29.8	186.6	6.2	1.01
250	AA-2600	2950	40.7	260.6	6.4	1.04
315	AA-3300	2950	50.0	323.4	6.4	1.03
355	AA-5600G	1450	60	376	6.26	1.06

AB ( )

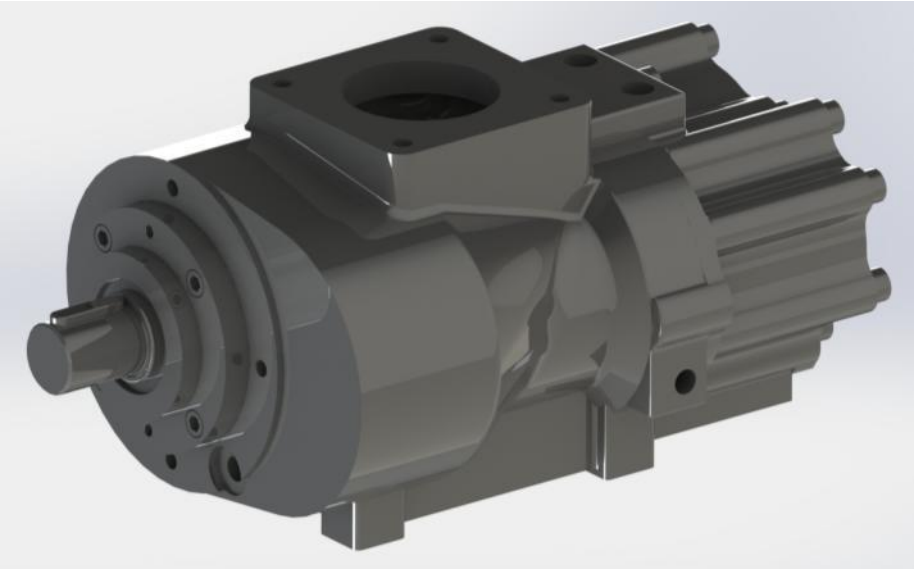

6.0~13.0 bar.g

-
-
-

(8 bar.g)

(kW)		(rpm)	(m^3/min)	(kW)	(kW/m^3/min)	S.F.
7.5	AB-077 ( )	3420	1	7.3	7.4	0.97
11	AB-077 ( )	5200	1.5	11	7.2	1
15	AB-130 ( )	3420	2	14.6	7.2	0.97
18.5	AB-210	2950	2.9	19.4	6.7	1.05
22	AB-240	2950	3.5	22.7	6.4	1.03
30	AB-350RS	2950	4.7	33.1	7.1	1.1
37	AB-420	2950	6.2	38.2	6.1	1.03
45	AB-480R	2950	7.1	47.5	6.7	1.05
55	AB-600R	2950	9.1	57.6	6.3	1.05
75	AB-780R	2950	11.9	73.3	6.1	0.98
75	AB-830	2950	12.9	80.6	6.2	1.07
90	AB-1030R	2950	14.8	95	6.4	1.08
110	AB-1200R	2950	19.4	115.5	5.9	1.05
132	AB-1320	2950	21.4	139.5	6.5	1.06
132	AB-1450R	2950	21.8	135.8	6.2	1.03
160	AB-1560	2950	23.9	151.6	6.3	0.95
160	AB-1560R	2950	24	151.6	6.3	0.95
185	AB-1900R	2950	29.8	186.6	6.2	1.01
250	AB-2600	2950	40.7	260.6	6.4	1.04
315	AB-3300	2950	50	323.4	6.4	1.03

AC ( )

6.0~10.0 bar.g

(8 bar.g)

(kW)		(rpm)	(m^3/min)	(kW)	(kW/m^3/min)	
7.5	AC-077	3600	1.03	7.3	7.09	/
11	AC-077	5200	1.59	11.0	6.92	/
11	AC-130	3000	1.92	12.7	6.61	/
15	AC-130	3600	2.34	15.6	6.67	/
15	AC-160E	3000	2.30	15.0	6.52	
22	AC-240	3000	3.59	23.0	6.41	
30	AC-420S	3000	4.50	31.0	6.89	
37	AC-420	3000	6.28	38.9	6.19	

-
-
-
-

AB+ ( )

6.0~10.0 bar.g

(8 bar.g)

(kW)		(rpm)	(m^3/min)	(kW)	(kW/m^3/min)	S.F.
7.5	AB-077PLUS ( )	3420	1.0	7.3	7.4	0.97
11	AB-077PLUS ( )	5200	1.5	11.0	7.2	1.00
15	AB-130PLUS ( )	3420	2.0	14.6	7.2	0.97
22	AB-240PLUS	2950	3.5	22.7	6.4	1.03
37	AB-420PLUS	2950	6.2	38.2	6.1	1.03

- AB ( ) AC
-
-

AD ( )

6.0~13.0 bar.g

(8 bar.g)

(kW)		(rpm)	(m^3/min)	(kW)	(kW/m^3/min)	
7.5	AD-077	3600	1.03	7.3	7.09	/
11	AD-077	5200	1.59	11.0	6.92	/
11	AD-130	3000	1.92	12.7	6.61	/
15	AD-130	3600	2.34	15.6	6.67	/
18.5	AD-210	3000	2.9	19.4	6.7	/
22	AD-210	3500	3.45	23.4	6.78	/
30	AD-420	2400	5.00	30.8	6.16	/
37	AD-420	3000	6.28	38.9	6.19	/

-
-

/

-

AB/AC-PM ( )

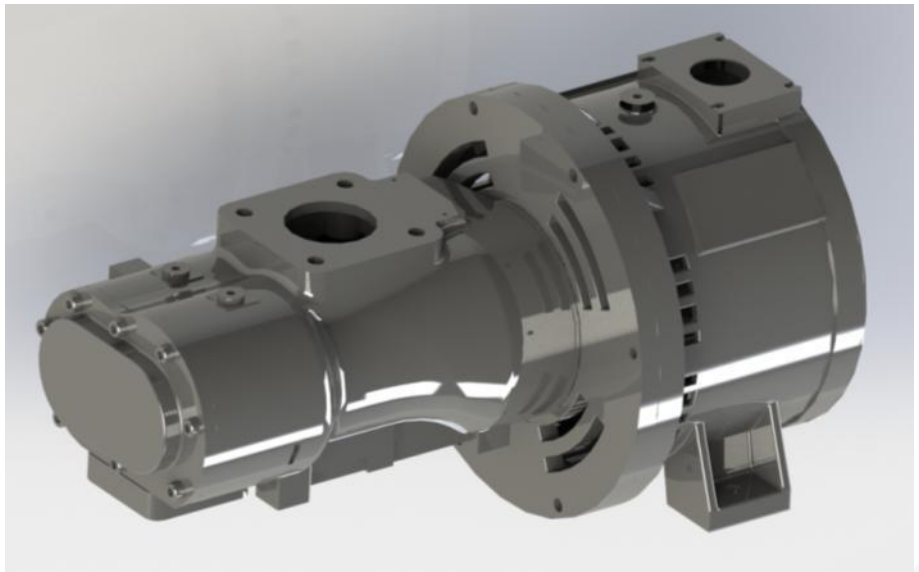

6.0~10.0/13.0 bar.g

-
-

(kW)		(rpm)		

AA-H ( )

17.0~35.0 bar.g

	(rpm)	(bar.g)	(m^3/min)	(kW)	(bar.g)
AA-040H (	2950	6.4	0.8	17~33	30~40
AA-140H (	2950	6.4	1.7	51~65	30~40
AA-1200RH	2950	0	17.6	158.8	17
AA-1900RH	2950	0	28.2	252	17

- 20CrMrTi ( ) 5:6
-

AA-BX ( )

17.0~35.0 bar.g

	(rpm)	(m^3/min)	(kW)	(bar.g)
AA-600BX	1490			

AB-L ( )

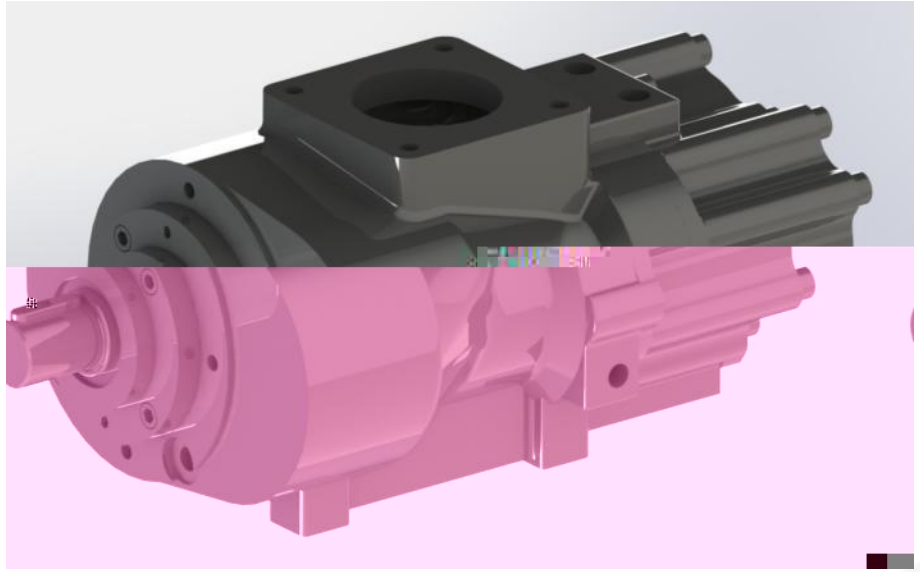

3.0~5.5 bar.g

(5 bar.g)

(kW)		(rpm)	(m^3/min)	(kW)	(kW/m^3/min)
15	AB-240L	2950	3.63	15.7	4.33
22	AB-350RL	2950	5.58	25.9	4.64
22	AB-420L	2950	6.33	28.9	4.57
30	AB-480RL	2950	7.72	34.4	4.46
37	AB-600RL	2950	9.26	47.2	5.10
45	AB-780RL	2950	12	55.5	4.63
55	AB-890LgAB	2950	12.8	59.6	[redacted]

AB-L-BX ( )

3.0~5.5 bar.g

- 5:6
-
-
-
-

(5 bar.g)

(kW)		(rpm)	(m^3/min)	(kW)	(kW/m^3/min)
45	AB-1030 B1L	1490	11.5	49.1	4.27
55	AB-1030 B2L	1490	15.9	69.7	4.38
75	AB-1030 B3L	1490	18.7	83.5	4.46
90	AB-1560 B2L	1490	21.6	99.1	4.59
110	AB-1560 B3L	1490	24.3	114.1	4.72
	AB-3300 B1L	1490	27.9	123.4	4.42
132	AB-3300 B2L	1490	32.3	142.9	4.43
150	AB-3300 B3L	1490	36.0	160.2	4.45
160	AB-3300 B4L	1490	40.7	183.2	4.50
	AB-5600 B1L	1490	41	172.6	4.21
185	AB-5600 B2L	1490	45.3	196.1	4.34
200	AB-5600 B3L	1490	50.1	222.6	4.44
220	AB-5600 B4L	1490	54.4	243.1	4.47
250	AB-5600 B5L	1490	61.8	279.1	4.52

108

Address No. 108, JianGong Rd., Feng